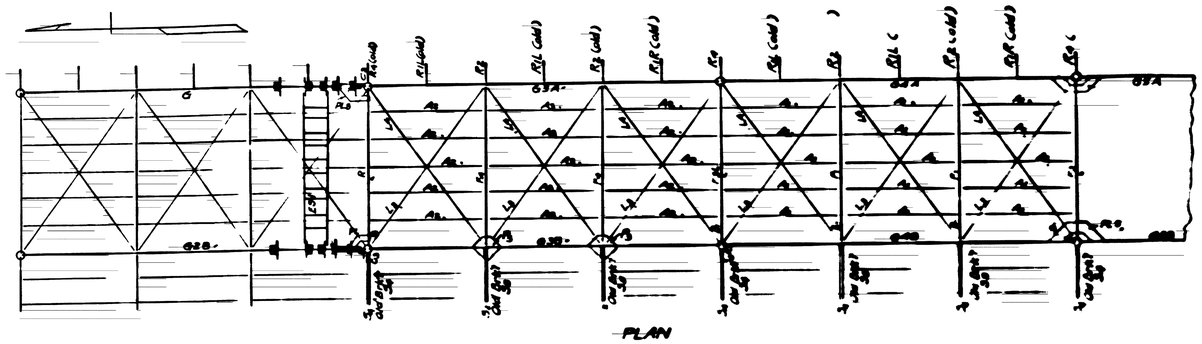

PLAN

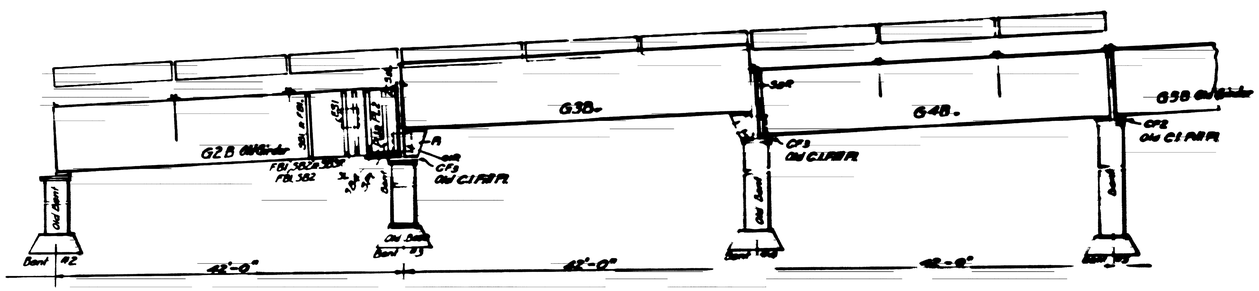

OUTSIDE ELEVATION OF WEST SIDE OF VIADUCT

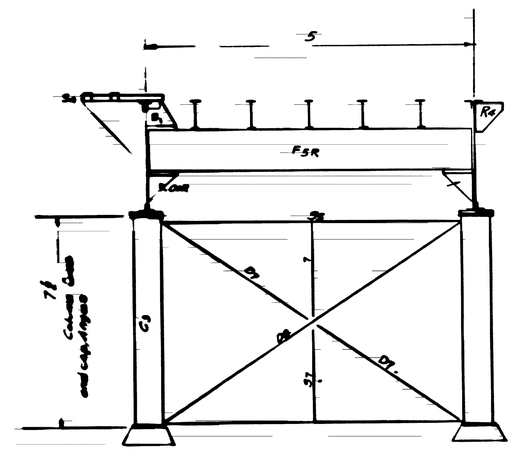

EVATION BENT NO3

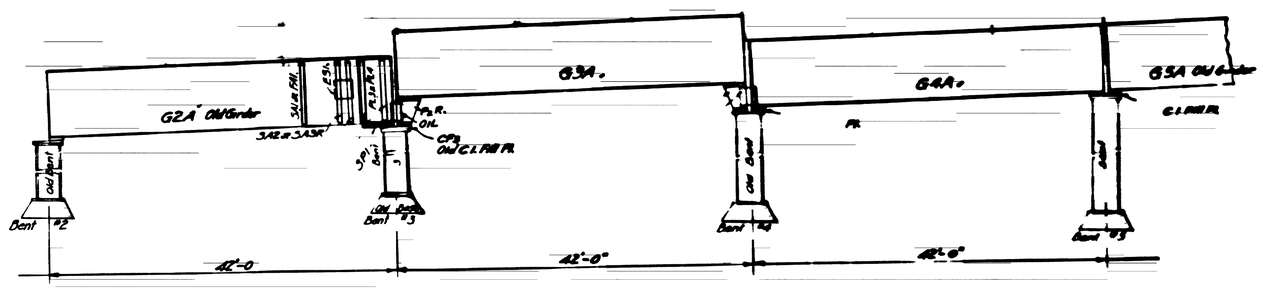

INSIDE ELEVATION OF EAST SIDE OF VIADUCT

Sche of gs

Sheet No	Description
1	c.tio Diagram
2	Old Girder G2B, changes, Strut E51
	Old Girder G2A, changes
4	G3B
5	New 3A
6	Ne Girder G4B and Plate # PL5
7	Girder G4A and # PL6
8	B t N of
9	Floor Beams F1 and, F5R and F5L
	Brackets O1R and O1L, New Pedestals, P1R and P1L, P2R and P2L
1	F4, Stringers A1, A, A3
	New Top Flanges on Sidewalk Brackets S4,
	Angles Brackets S5R and S5L
11	Ne L3 and L4, w Top Flanges Sidewalk Brackets, S2
	Brackets B1
	Old Roadway Railing Brackets R1R and R1L, R2 and R4
12	De f eld vets

General Notes

Material; Structural Steel
, Detail Sheets

Open Holes, As noted on Sheets
aming,

Painting,— All surfaces in contact after
bling shall good at of mineral
before assemb All surfac
coat of seed oil—

Field Painting, (Work to be done by City of San Bernardino)
After metal thoroughly cleaned from
dirt and grease, shall t coats
Atchison Topeka Railway Company's Standard
Paint Painting shall not
weather and shall
dry painting—

Field Painting on Old Steel Work; (Work to be done
City of Bernardino
metal shall thoroughly cleaned
sand blast of all dirt, grease, rus and
before painting—

Erection Work (Work to be done by the City of San Bernardino
shall embrace removal of all
of members the 3 spans between
3 except
noted plans re-assembled and
Connected structure
shall include
removal Bent No 3 (except masonry
footing erection of
thereupon
work shall also include the
of of Old Girders
G2A follows,
and Flange
girders shall
straightened, bringing
vertical pos removing stiffener
noted, drilling
old girder, and re-assembling
old and aterial,
detail sheets 2, and 3
of cleaning and painting
of old and new bef assembling
specified
wing removal
members replaced
by and repair of Girders
G2 G2A, members
between Bents and shall assembled
and riveted painting required
parts ble
assembling

Replacement Roadway Planking and surfacing
and Sidewalk Planking by the City of
Bernardino

Replacement Roadway and
by City of San Bernardino

AN N 741

RECONSTRUCTING PORTION
MT VERNON VENUE HIGHWAY BRIDGE
tracks Between Cd Stree
IN THE
CITY SAN BERNARDINO IFORNIA

Diagram

Engineer

December 11,

1

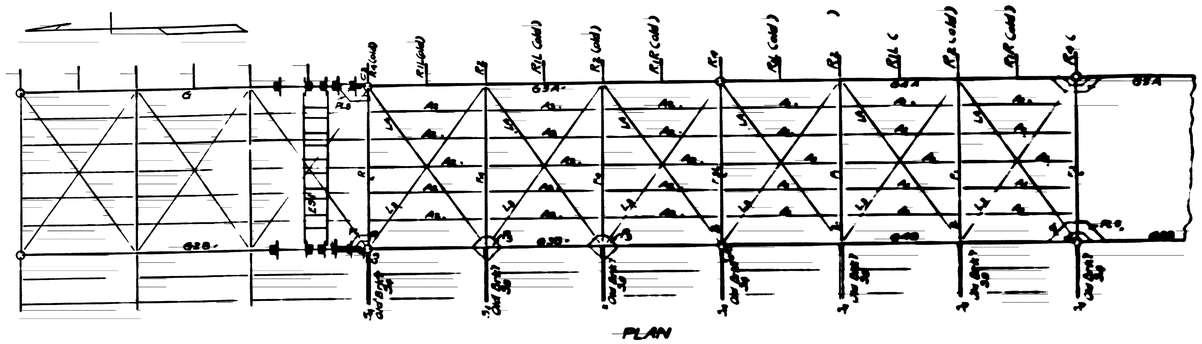

PLAN

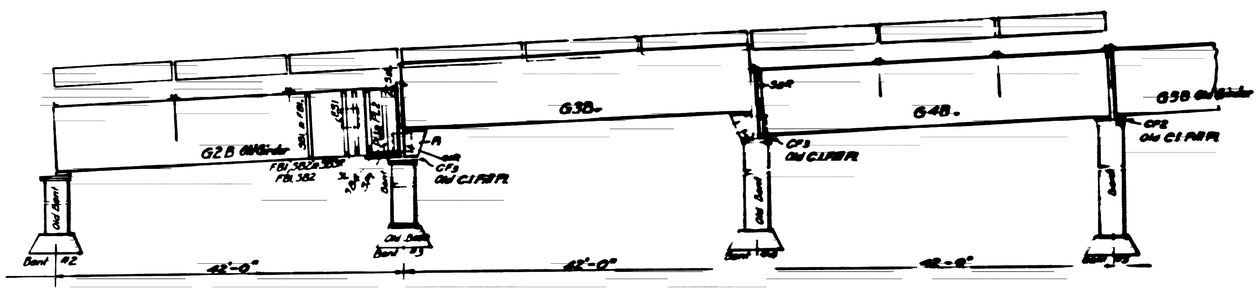

OUTSIDE ELEVATION OF WEST SIDE OF VIADUCT

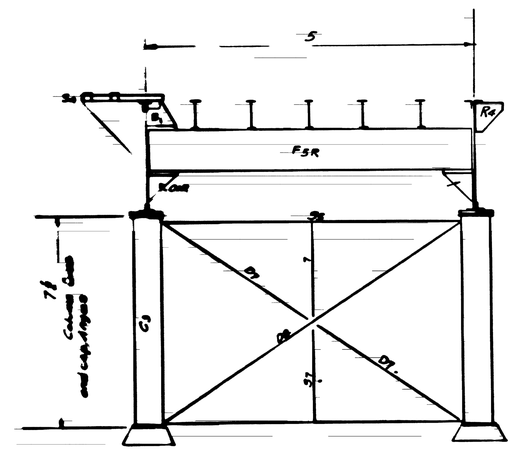

EVATION BENT NO3

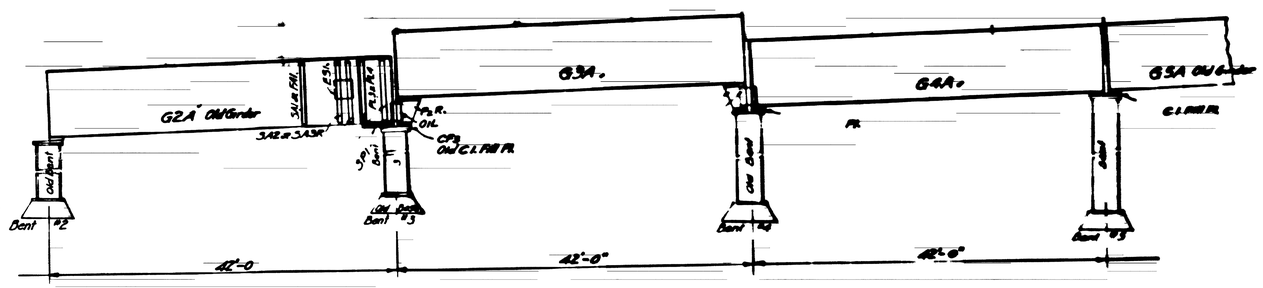

INSIDE ELEVATION OF EAST SIDE OF VIADUCT

Sche of gs

Sheet No	Description
1	c.tio Diagram
2	Old Girder G2B, changes, Strut E51
	Old Girder G2A, changes
4	G3B
5	New 3A
6	Ne Girder G4B and Plate # PL5
7	Girder G4A and # PL6
8	B t N of
9	Floor Beams F1 and, F5R and F5L
	Brackets O1R and O1L, New Pedestals, P1R and P1L, P2R and P2L
1	F4, Stringers A1, A, A3
	New Top Flanges on Sidewalk Brackets S4,
	Angles Brackets S5R and S5L
11	Ne L3 and L4, w Top Flanges Sidewalk Brackets, S2
	Brackets B1
	Old Roadway Railing Brackets R1R and R1L, R2 and R4
12	De f eld vets

General Notes

Material; Structural Steel
, Detail Sheets

Open Holes, As noted on Sheets
aming,

Painting,— All surfaces in contact after
bling shall good at of mineral
before assemb All surfac
coat of seed oil—

Field Painting, (Work to be done by City of San Bernardino)
After metal thoroughly cleaned from
dirt and grease, shall t coats
Atchison Topeka Railway Company's Standard
Paint Painting shall not
weather and shall
dry painting—

Field Painting on Old Steel Work; (Work to be done
City of Bernardino
metal shall thoroughly cleaned
sand blast of all dirt, grease, rus and
before painting—

Erection Work (Work to be done by the City of San Bernardino
shall embrace removal of all
of members the 3 spans between
3 except
noted plans re-assembled and
Connected structure
shall include
removal Bent No 3 (except masonry
footing erection of
thereupon
work shall also include the
of of Old Girders
G2A follows,
and Flange
girders shall
straightened, bringing
vertical pos removing stiffener
noted, drilling
old girder, and re-assembling
old and aterial,
detail sheets 2, and 3
of cleaning and painting
of old and new bef assembling
specified
wing removal
members replaced
by and repair of Girders
G2 G2A, members
between Bents and shall assembled
and riveted painting required
parts ble
assembling

Replacement Roadway Planking and surfacing
and Sidewalk Planking by the City of
Bernardino

Replacement Roadway and
by City of San Bernardino

AN N 741

RECONSTRUCTING PORTION
MT VERNON VENUE HIGHWAY BRIDGE
tracks Between Cd Stree
IN THE
CITY SAN BERNARDINO IFORNIA

Diagram

Engineer

December 11,

1

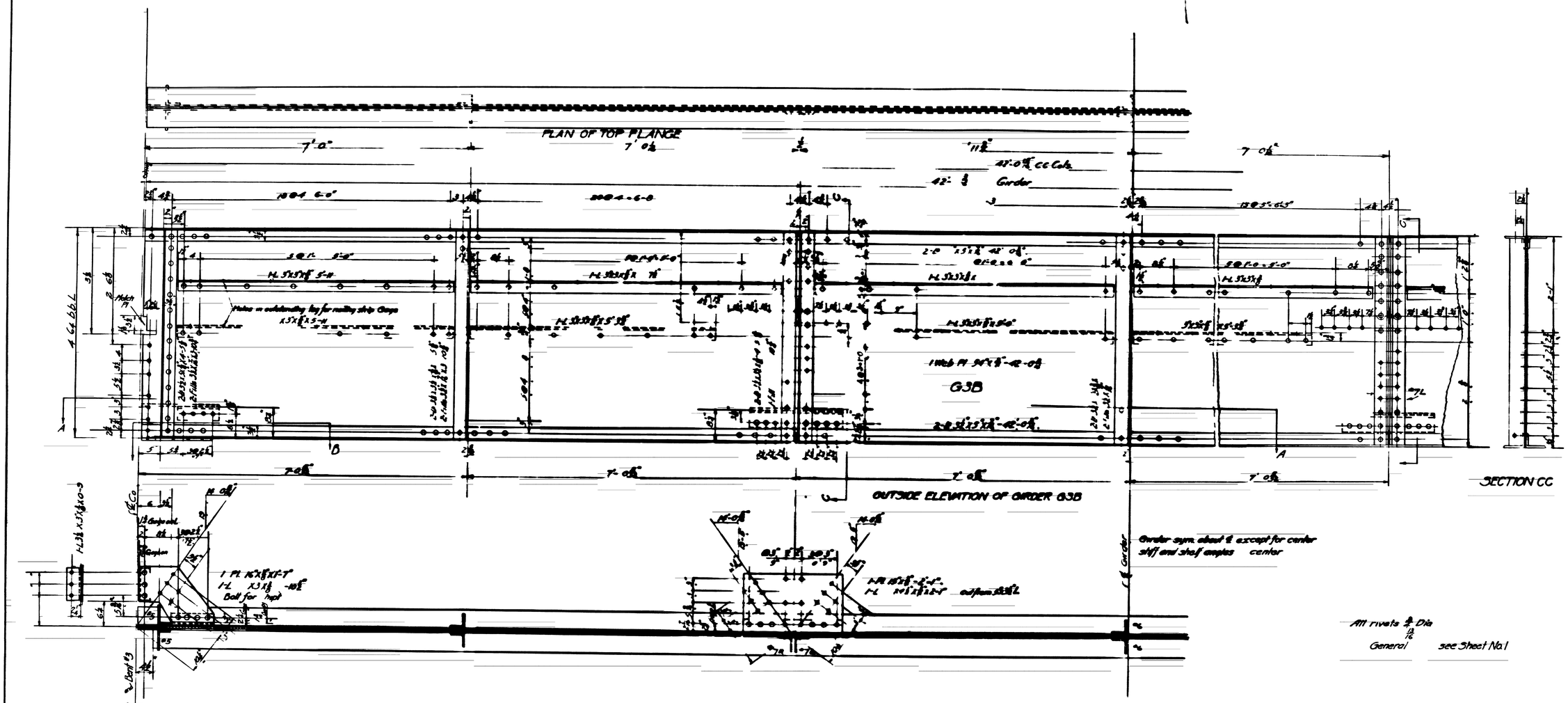

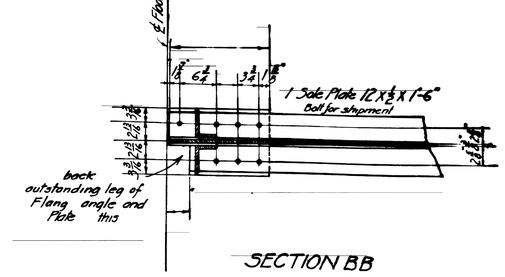

SECTION AA

Make 1 Girder as shown - Mark G3B

Material L

Pieces	Description	Mark	Size	Length	
	Flanges				
	Plate				
4					
3					
2					
	Sole Plates				

N 741

FOR RECONSTRUCTING A PORTION OF
MT VERNON VENUE HIGHWAY BRIDGE
F tracks Between Streets
IN THE
CITY BERNARDINO IFORNIA

Girder

Scale

Engineer

Decem

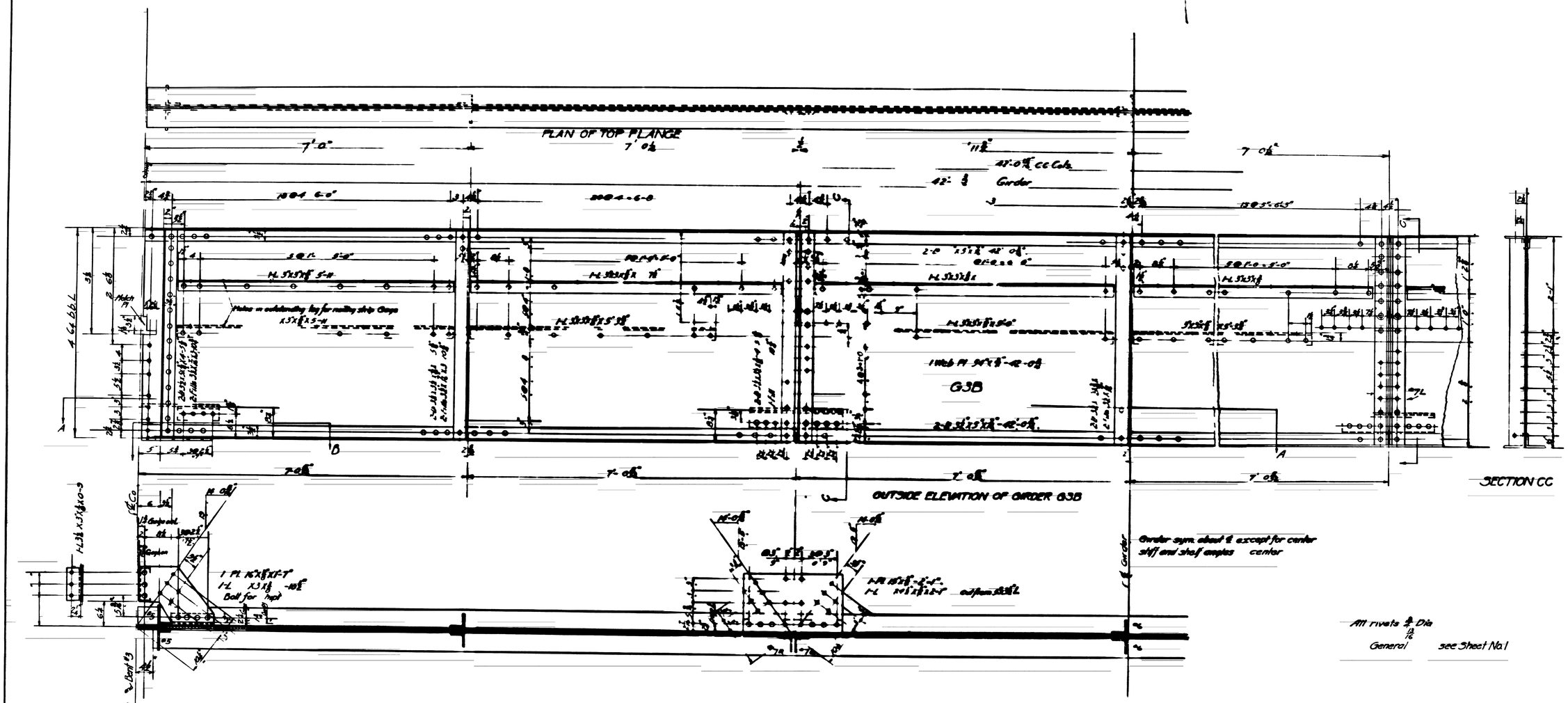

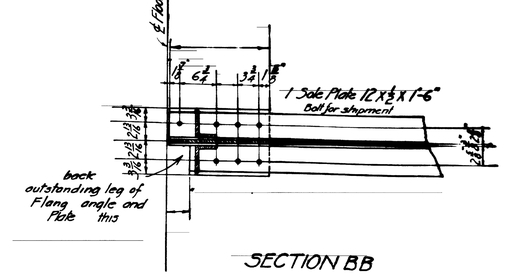

SECTION AA

Make 1 Girder as shown - Mark G3B

Material L

Pieces	Description	Mark	Size	Length	
	Flanges				
	Plate				
4					
3					
2					
	Sole Plates				

N 741

FOR RECONSTRUCTING A PORTION OF
MT VERNON VENUE HIGHWAY BRIDGE
F tracks Between Streets
IN THE
CITY BERNARDINO IFORNIA

Girder

Scale

Engineer

Decem